HEATLESS ADSORPTION DRYER
model ELDD42000

EURO MAY 04
1/230-240/50

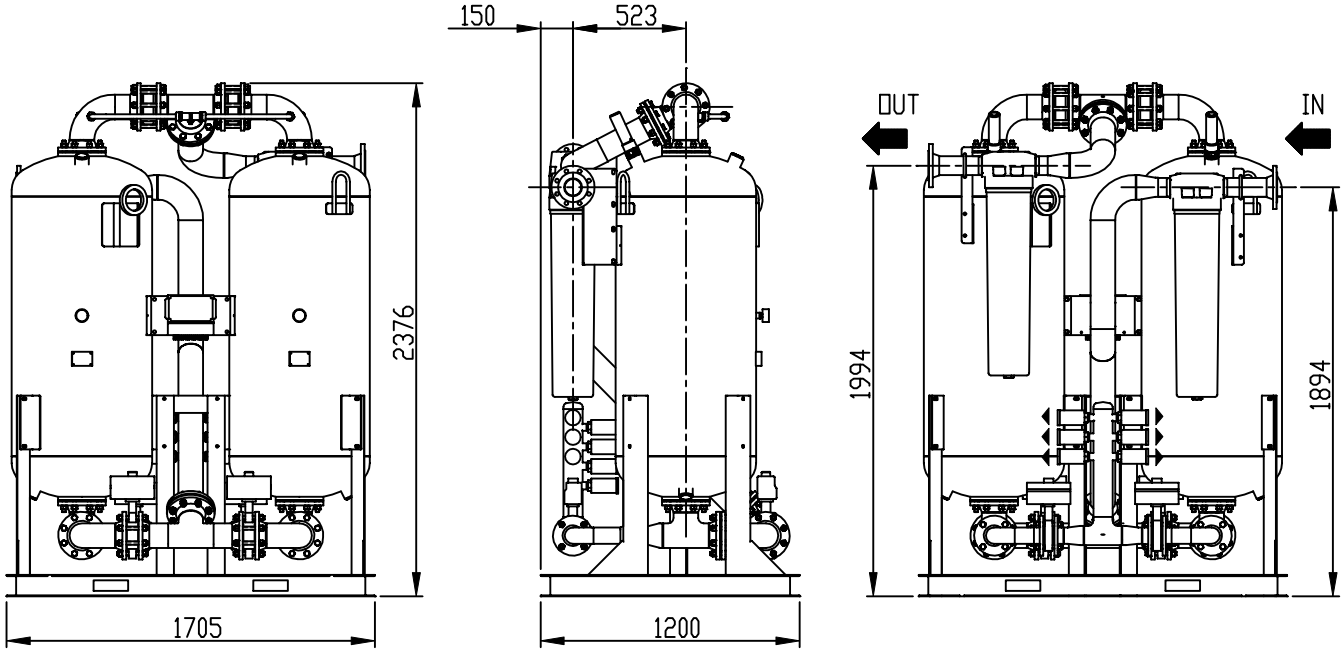

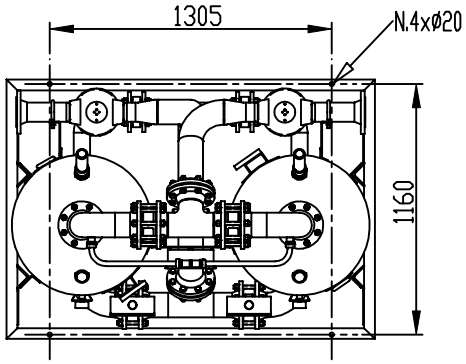

Air flow at nominal condition [1]	42000 Nl/min – 2520 Nm³/h – 1484 Scfm
Pressure DewPoint at nominal condition [2]	-20 °C, -40 °C o -70 °C
Nominal ambient temperature	1 - 50 °C
Nominal inlet air temperature	35 °C
Max. inlet air temperature	50 °C
Nominal inlet air pressure	7 barg
Max. inlet air pressure [3]	10.3 barg
Inlet-outlet air connection	DN 80 - PN 16
Desiccant type and quantity	Molecular Sieve - 690 kg
Power supply	1/230-240V/50Hz
Electric consumption	50 W
Weight	1850 kg

[1] The nominal condition refers to an inlet air at 7 barg and 35°C.
[2] Specify it, at ordering confirmation.
[3] Maximum working pressure up to 16 barg on request.

Correction factor for operating pressure changes :													
Inlet air pressure barg	4.0	5.0	6.0	7.0	8.0	9.0	10.0	11.0	12.0	13.0	14.0	15.0	16.0
Correction factor	0.62	0.77	0.90	1.00	1.09	1.17	1.24	1.31	1.37	1.42	1.47	1.52	1.56

Correction factor for inlet air temperature changes :						
Air temperature °C	< 25	30	35	40	45	50
Correction factor	1.12	1.06	1.00	0.93	0.86	0.78